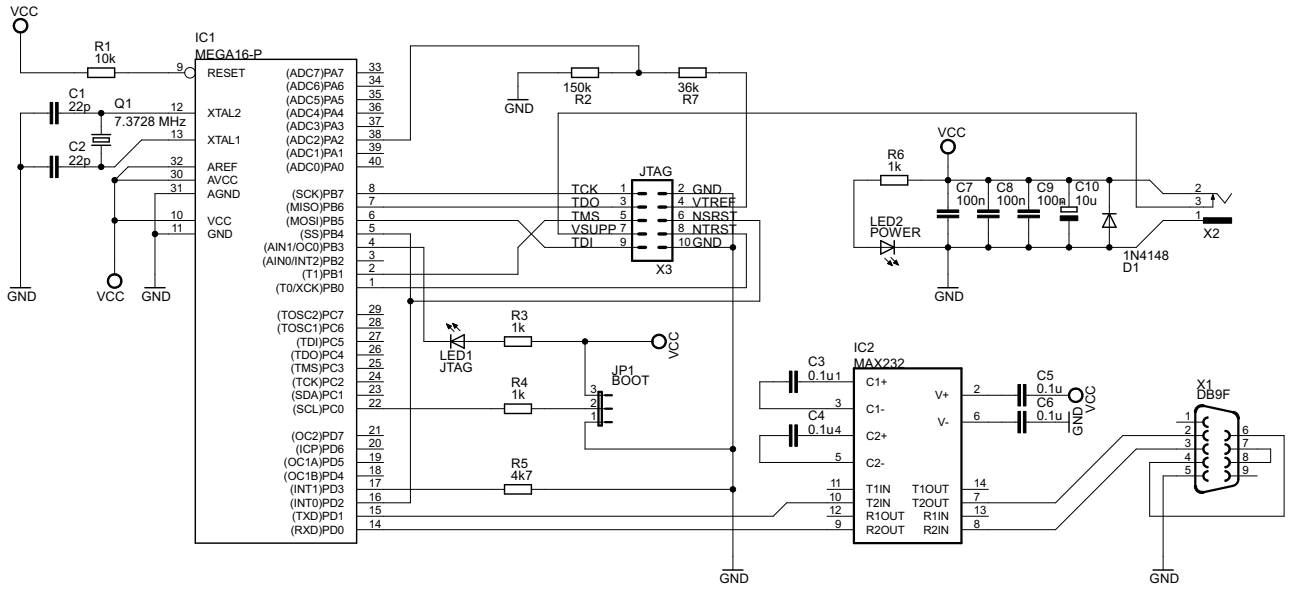

AQUATICUS ROV

TITLE: avrjtag

Document Number:
http://aquaticus.info/jtag

REV: B

Date: 2009-06-25 22:57:36

Sheet: 1/1